卷册检索号 SEARCH NO. OF THE VOLUME
MLHVDC-LCS-CET-DD-WS-0502 49-B60011S-S0502

第 1 页 共 1 页
PAGE OF

图纸文件目录（首页）

CATALOG OF DRAWING DOCUMENTS (HEAD PAGE)

拉合尔±660kV换流站 工程 施工图 阶段
±660kV Lahore Converter Station PROJECT Detail Design DESIGN STAGE

水布 专业 第 05 卷 第 02 册
Hydraulic SPECIALITY VOLUME BOOK

卷册名称 500kv/35kV、132kV变压器事故排油管道布置图
Volume name Layout Drawing Of Emergency Oil Drainage Pipe Of 500kv/35kV、132kV Transformer

批 准 APPROVED BY	田俊强
审 核 REVIEWED BY	[illegible]
设计/勘测 DESIGNED BY/ SURVEYED BY	[illegible]
图 纸 6 张 DRAWING NOS.	打印件 0 本 PRINTED COPIES NOS.

序号 No.	图 号 DRAWING NO.	文 件 名 称 DOCUMENT TITLE	版本 EDITION	张 NOS.	本 NOS.	备注 REMARKS
1	49-B60011S-S0502-001	500kv/35kV变压器事故排油平面布置图	B	1		
		Layout Drawing Of Transformer Emergency Oil Drainage Pipe Of 500kV/35kV Transformer				
2	49-B60011S-S0502-002	132kV站用变事故排油平面布置图				
		Layout Drawing Of Emergency Oil Drainage Pipe Of 132kV Transformer	B	1		
	49-B60011S-S0502-003	500kv/35kV变压器事故排油水封井、检查井汇总表	B	1		
3		Summary Table of Water Sealed Well And Inspection Well Of Emergency Oil Drainage				
		System Of 500kV/35kV Transformer				
	49-B60011S-S0502-004	500kv/35kV变压器事故排油水封井布置详图（一）	B	1		
4		Detail Layout Srawing Of Water Sealed Well For Emergency Oil Drainage System Of 500kV/35kV				
		Transformer（一）				
	49-B60011S-S0502-005	500kv/35kV变压器事故排油水封井布置详图（二）	B	1		
5		Detail Layout Srawing Of Water Sealed Well For Emergency Oil Drainage System Of 500kV/35kV				
		Transformer（二）				
6	49-B60011S-S0502-006	500kv/35kV变压器事故排油材料表	B	1		
		500kv/35kV Transformer Emergency Oil Drainage System Material Summary				

注： 本工程初步设计尚未审定，未通过NTDC审核，图纸存在修改的可能，本册图纸施工前请联系CET确认。

The preliminary design of this project has not been approved and has not been approved by NTDC.

The modification is possible in this diagram. Please contact CET for confirmation before construction.

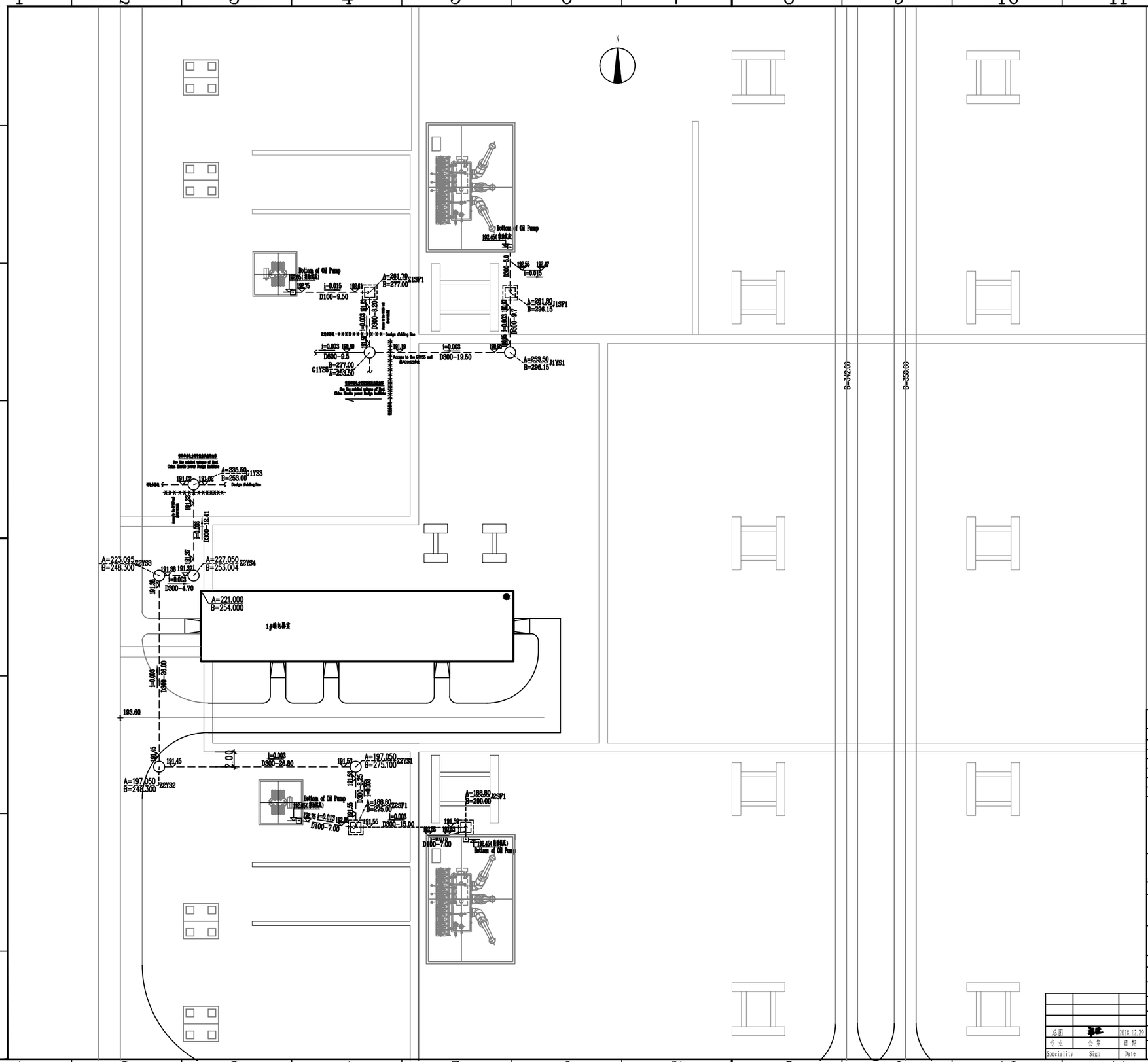

说明：

1、本图地坪标高采用EGM2008高程系统，单位以m计。站区场地平均标高为193.40m，站内道路及换流变广场标高为193.60m。
2、本场所坐标系统采用地区坐标系统，单位以m计；站区坐标系统与巴基斯坦UTM-43N平面坐标系的换算公式详见土建初步电器。
3、站内道路为郊区型道路。本图内道路、建筑物、构筑物相对位置仅为示意，以土建初步电器为准。
4、图中J1SP1、J2SP1、Z1SP1、Z2SP1均为水封井，布置详图其本电器图B60011S-S0502-003图。
5、水封井和事故油池土建施工图详见发电站初步电器。
6、事故排油管道均采用球墨铸铁管，管径以D表示，橡胶圈接口不加地锚，图注管道标高为管内底标高。
管道接口要求严密不漏水，并具有弹性。
7、本工程变压器事故排油管道采用开槽施工，施工要求：
1）沟槽底部宽度宜按管径加600mm确定，以便于人工在槽底作业为宜。
2）管道基础自下而上依次为150mm厚的土垫层、300mm厚的3:7灰土垫层、100mm中粗砂垫层，
设计支承角为120°。水封井及排油井下地基自下而上依次为150mm厚的土垫层、300mm厚的灰土垫层。
8、沟槽回填应先从管底向上填入工作次分层对称回填。分次、回填材料及密实度符合下列要求：
1）沟槽回填应先从管底两侧胸角部位开始，用中砂或粗砂填充捣实，再用中、粗砂或石屑回填到管顶，
再往上可回填良土，管顶400mm以下沟槽回填的材料应严格控制，回管顶以上0.7m时方可使用机械回填压实。
2）回填土的实度应符合中华人民共和国行业标准《市政排水管道工程质量检验评定标准》(CJJ3-90)中
回填土的压实度标准或见定或本地区对管道工程回填土的实度的有关规定。
9、管道施工验收按《给水排水管道工程施工验收规范》GB50268-2008。
10、铸铁管防腐要求：a.除锈手工达st3级以上，喷砂达sa2.5级以上，并保持基材干燥。
b.用沥青涂油铸铁管防腐涂料3道，每500g/m².

Notes:

1. EGM2008 elevation is adopted in this volume,unit of elevation is m.Average elevation of outdoor ground is 193.40m,and that of road and converter transformer square is 193.60m.
2. The station coordinate(AB) is adopted in this volume,unit of coordinate is m; station coordinate(AB) and UTM-43N system conversion formula refers to Civil Engineering volume.
3. Station road adopts suburban road type.Relative location of roads, buildings and structures in the drawing is only for schematic drawing,details refer to Civil Engineering volume.
4. J1SP1、J2SP1、Z1SP1、Z2SP1 in drawing represent Water sealed wells,layout drawings refer to B60011S-S0502-003.
5. Civil engineering drawings of Water sealed wells & Oil separating pond refer to relevant volumes.
6. Oil drainage piping adopts ductile iron pipe,diameter is expressed as symbol D,bell & spigot joint with rubber ring gasket.Pipe elevation is represented with the inner bottom elevation.Pipe joint shall be strictly water-tight and flexible.
7. Oil drainage piping adopts trench installation, requiremens of construction:
1) Net width of trench should be 600 larger than pipe diameter,so as to be convenient for manual operation.
2) Pipe foundation consists of 150mm thickness of soil cushion,300mm thickness of lime-soil cushion with a ratio of 3:7 and 100 mm thickness of medium coarse sand cushion from bottom to top. Design support angle is 120°.Foundation of Water sealed well and inspection well consist of 150mm thickness of soil cushion and 300mm thickness of lime-soil cushion.
8. Trench backfill shall start manually from bottom of pipe to top,symmetric backfill and compaction shall proceed in proper order.Material of backfill and procedure shall fulfill following requirements:
1) Trench backfill shall start from axillary region of both sides of pipe bottom part,filled by sand or coarse densely,then backfilled to top with medium-coarse sand or aggregate chips,higher than which good soil shall be backfilled,the backfill material at the space 400mm lower than top shall strictly controlled,and machine is only allowed as backfill process proceeding to space 0.7m higher than top.
2) Compactness of backfill shall comply with relevant requirements in PRC industrial standard《Quality inspection and evaluation criteria for municipal drainage pipes.》(CJJ3-90)or local rules.
9. Construction and acceptance inspection shall comply with《Code for construction and acceptance of water and sewerage pipeline works》(GB50268-2008).
10. Requirements of cast iron pipe: a.manually descaling shall reach st 3rd class standard, sand blast shall reach st 2.5 class standard,and keep base material dry.
b.3 layers of pitch resin anticorrosive material, approx. 500g/m².

Reference Drawings

Drwg. No.	Title

Revisions

Name	Date	Notes

巴基斯坦默蒂亚里—拉合尔±660kV直流输电工程
±660kV HVDC Project from Matiari to Lahore in Pakistan

NATIONAL TRANSMISSION & DESPATCH COMPANY (NTDC) LIMITED PAKISTAN

CONTRACTOR 国家电网 中国电力技术装备有限公司

拉合尔±660kV换流站
±660kV Lahore Converter Station

设计阶段 PHASE | 施工图 Detail Design

M L H Y D C - L C S - C E T - D D - W S - 0 5 0 2 - 0 0 1 B

	姓名 Name	日期 Date
设计 Designed		2018.12.29
校核 Checked		2018.12.29
审核 Reviewed		2018.12.29
批准 Approved		2018.12.29
比例 Scale		图号 DWG NO.

专业 Speciality	会签 Sign	日期 Date
总图		2018.12.29

500kv/35kV变压器事故排油平面布置图
Layout Drawing Of Emergency Oil Drainage Pipe Of 500kV/35kV Transformer

49-B60011S-S0502-001

版本 REV. B

594X841

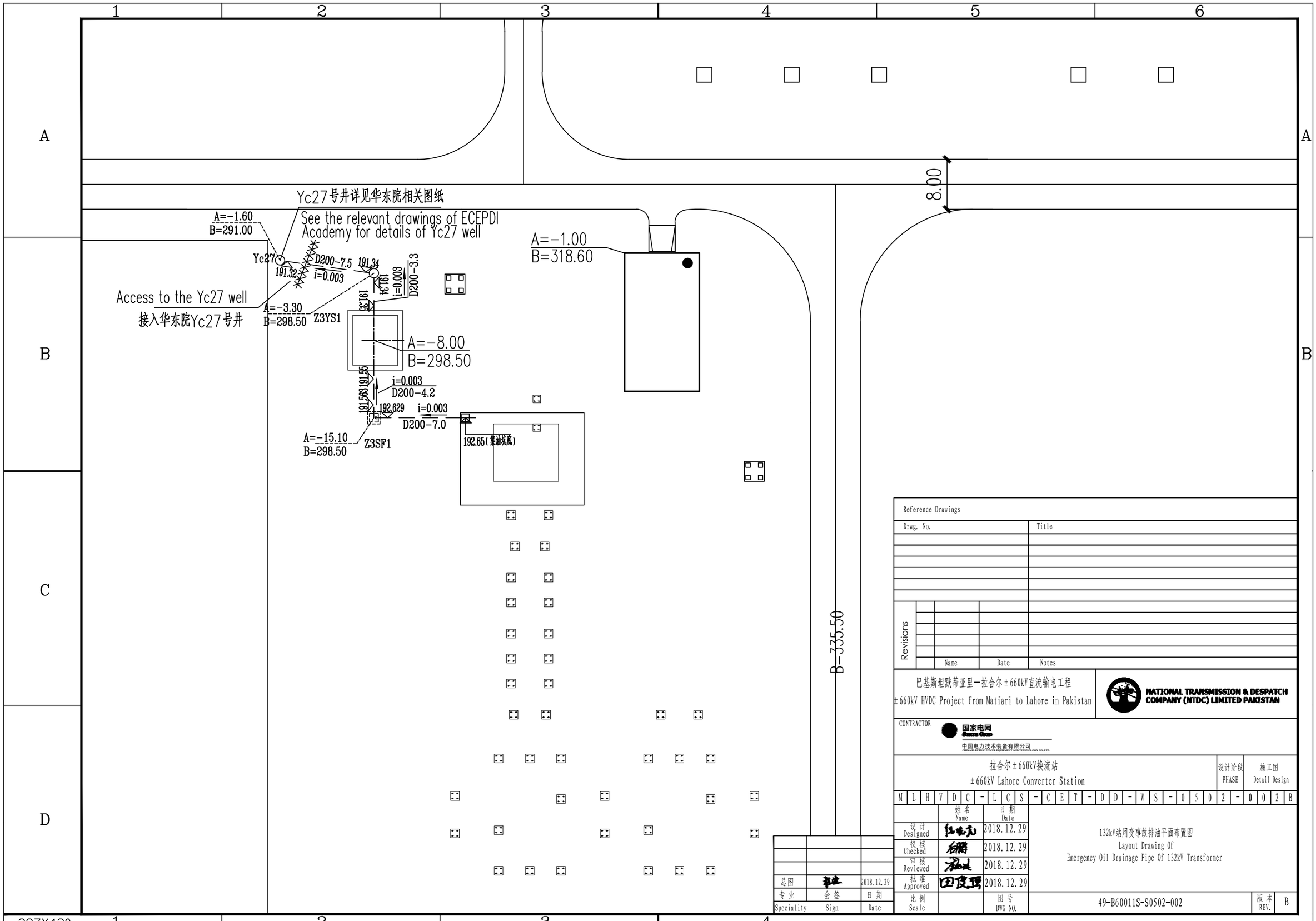

Reference Drawings

Drwg. No.	Title

Revisions

	Name	Date	Notes

巴基斯坦默蒂亚里—拉合尔±660kV直流输电工程

±660kV HVDC Project from Matiari to Lahore in Pakistan

NATIONAL TRANSMISSION & DESPATCH COMPANY (NTDC) LIMITED PAKISTAN

CONTRACTOR 国家电网 SGCC 中国电力技术装备有限公司 CHINA ELECTRIC POWER EQUIPMENT AND TECHNOLOGY CO.,LTD.

拉合尔±660kV换流站

±660kV Lahore Converter Station

设计阶段 PHASE: 施工图 Detail Design

M L H V D C - L C S - C E T - D D - W S - 0 5 0 2 - 0 0 2 B

	姓名 Name	日期 Date
设计 Designed		2018.12.29
校核 Checked		2018.12.29
审核 Reviewed		2018.12.29
批准 Approved		2018.12.29

132kV站用变事故排油平面布置图

Layout Drawing Of Emergency Oil Drainage Pipe Of 132kV Transformer

比例 Scale | 图号 DWG NO. 49-B60011S-S0502-002 | 版本 REV. B

总图		2018.12.29
专业 Speciality	会签 Sign	日期 Date

297X420

井编号 No.	井结点 Inspection Well Nodes 平面示意图 Plan Sketch	井中心座标 Center Coordinate Of Inspection Well A/B m	干管 Main Pipe D1 管径 Diameter mm	干管 Main Pipe D1 标高 Elevation m	干管 Main Pipe D2 管径 Diameter mm	干管 Main Pipe D2 标高 Elevation m	支管 Branch Pipe ø1 ø3 ø5 管径 Diameter mm	支管 Branch Pipe ø1 ø3 ø5 标高 Elevation m	井尺寸 Size Of Inspection Well mm	井标高 Elevation Of Inspection Well m 井顶 Top	井标高 Elevation Of Inspection Well m 井底 Bottom	井深 Depth Of Inspection Well m	参考图号及备注 Reference Drawing No. & Remarks
J1SF1	ø1 D1	261.80 / 296.50	300	190.97			300	192.505	1000×1000	193.45	190.27	3.13	B60011S-S0303-03
Z1SF1	ø1 D1	261.70 / 277.00	100	190.92			100	192.61	1000×1000	193.45	190.22	3.18	B60011S-S0303-03
J1YS1	D1 D2	253.50 / 296.50	300	190.95	300	190.95			D1000	193.45	190.95	2.50	Water supply and drainage standard collective drawings 给水排水标准图集 02S515 11
J2SF1	D1 ø1	188.80 / 290.00	300	191.59			300	192.53	1000×1000	193.45	190.89	2.51	B60011S-S0303-03
Z2SF1	D2 ø1 D1	188.80 / 275.00	300	191.55	300	191.55	100	192.66	1000×1000	193.45	190.85	2.55	B60011S-S0303-03
Z2YS1	D2 D1	197.050 / 275.100	300	191.52	300	191.52			D1000	193.45	191.52	1.88	B60011S-S0303-03
Z2YS2	D2 D1	197.050 / 248.300	300	191.45	300	191.45			D1000	193.45	191.45	2.00	Water supply and drainage standard collective drawings 给水排水标准图集 02S515 11
Z2YS3	D2 D1	223.095 / 248.300	300	191.38	300	191.38			D1000	193.45	191.38	2.02	Water supply and drainage standard collective drawings 给水排水标准图集 02S515 11
Z2YS4	D1 D2	227.050 / 253.004	300	191.37	300	191.37			D1000	193.45	191.37	2.03	Water supply and drainage standard collective drawings 给水排水标准图集 02S515 11

说明:

1. 本图采用站区座标系统，标高采用EGM2008高程系统，单位均以m计。所注标高为管内底标高，图中球墨铸铁管以D表示。
2. 水封井平面位置及说明参见本卷册：B60011S-S0502-001和002图。

Notes:

1. The station coordinate(AB) is adopted in this volume,unit of coordinate is m; EGM2008 elevation is adopted in this volume,unit of elevation is m; Pipe elevation is represented with the inner bottom elevation; diameters is expressed as symbol D.
2. Water sealed well plan location and descriptions refer to the drawing B60011S-S0502-001 and 002.

Reference Drawings

Drwg. No.	Title

Revisions

	Name	Date	Notes

巴基斯坦默蒂亚里—拉合尔±660kV直流输电工程
±660kV HVDC Project from Matiari to Lahore in Pakistan

NATIONAL TRANSMISSION & DESPATCH COMPANY (NTDC) LIMITED PAKISTAN

CONTRACTOR 国家电网 STATE GRID 中国电力技术装备有限公司 CHINA ELECTRIC POWER EQUIPMENT AND TECHNOLOGY CO.,LTD.

拉合尔±660kV换流站
±660kV Lahore Converter Station

设计阶段 PHASE: 施工图 Detail Design

M L H V D C - L C S - C E T - D D - W S - 0 5 0 2 - 0 0 3 B

	姓名 Name	日期 Date
设计 Designed		2018.12.29
校核 Checked		2018.12.29
审核 Reviewed		2018.12.29
批准 Approved		2018.12.29

500kv/35kV变压器事故排油水封井、检查井汇总表
Summary Table of Water Sealed Well And Inspection Well For Emergency Oil Drainage System Of 500kV/35kVTransformer

比例 Scale | 图号 DWG NO. 49-B60011S-S0502-003 | 版本 REV. B

297X420

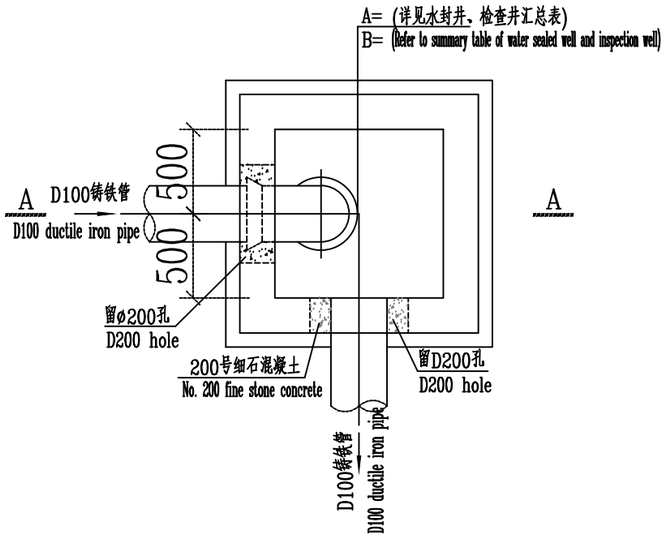

水封井平面图(Z1SF1)

Water sealed well plan(Z1SF1)

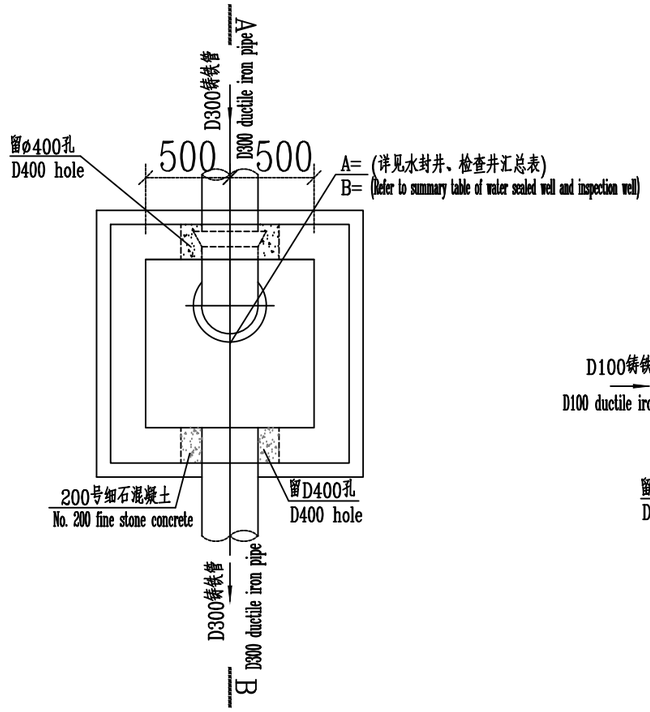

水封井平面图(J1SF1)

Water sealed well plan(J1SF1)

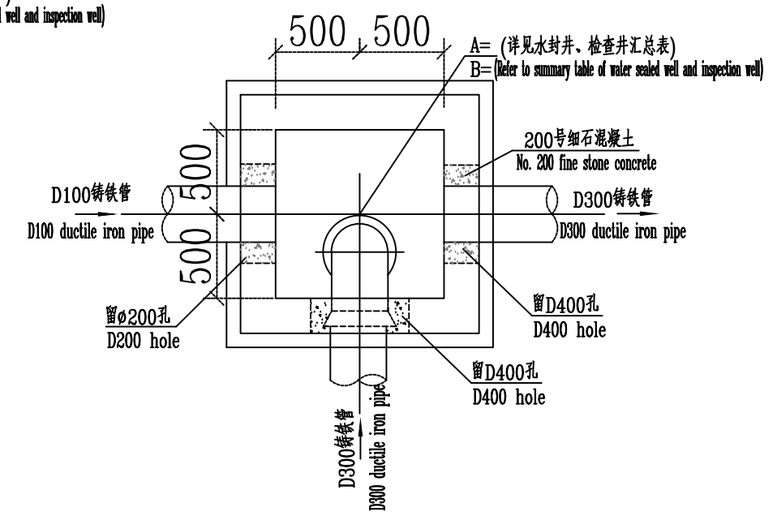

水封井平面图(J2SF1)

Water sealed well plan(J2SF1)

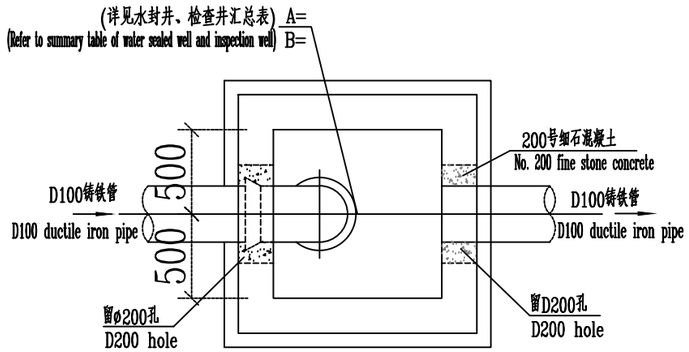

水封井平面图(Z2SF1)

Water sealed well plan(Z2SF1)

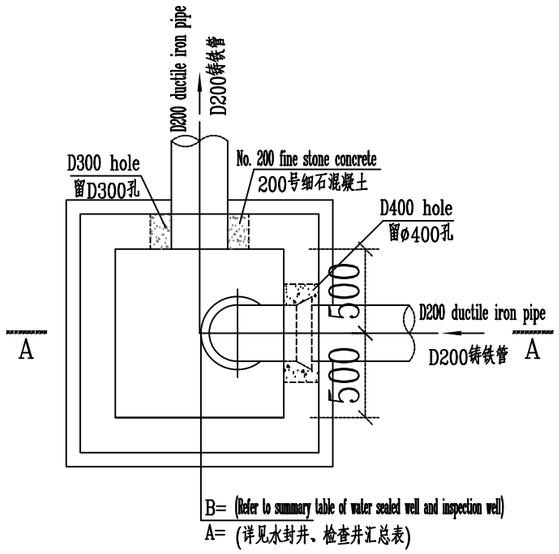

Water sealed well plan(Z3SF1)

水封井平面图(Z3SF1)

Reference Drawings

Drwg. No.	Title

Revisions

	Name	Date	Notes

巴基斯坦默蒂亚里—拉合尔±660kV直流输电工程

±660kV HVDC Project from Matiari to Lahore in Pakistan

NATIONAL TRANSMISSION & DESPATCH COMPANY (NTDC) LIMITED PAKISTAN

CONTRACTOR 国家电网 State Grid 中国电力技术装备有限公司 CHINA ELECTRIC POWER EQUIPMENT AND TECHNOLOGY CO.,LTD.

拉合尔±660kV换流站

±660kV Lahore Converter Station

设计阶段 PHASE: 施工图 Detail Design

M L H V D C - L C S - C E T - D D - W S - 0 5 0 2 - 0 0 4 B

	姓名 Name	日期 Date
设计 Designed		2018.12.29
校核 Checked		2018.12.29
审核 Reviewed		2018.12.29
批准 Approved		2018.12.29
比例 Scale		图号 DWG NO.

500kv/35kV变压器事故排油水封井布置详图(一)

Detail Layout Srawing Of Water Sealed Well For Emergency Oil Drainage System Of 500kV/35kV Transformer(一)

49-B60011S-S0502-004

版本 REV. B

297X420

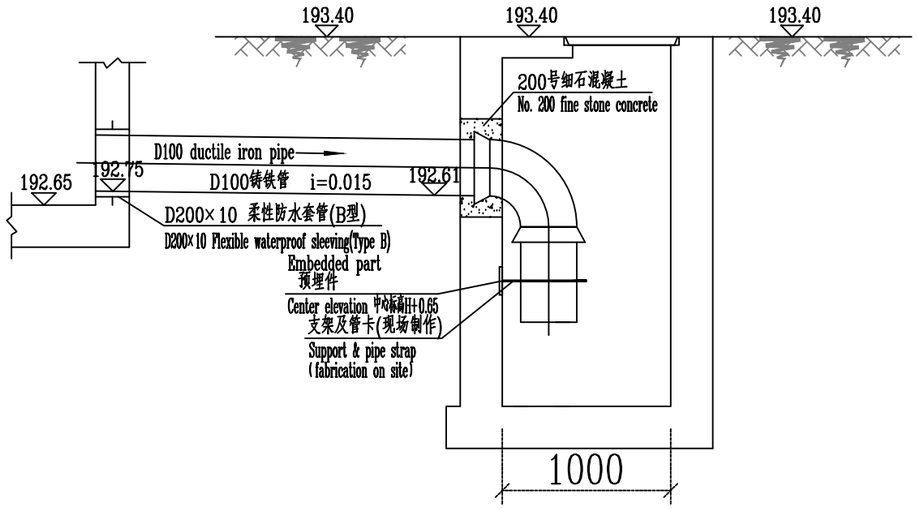

水封井A-A剖面图

A-A Section

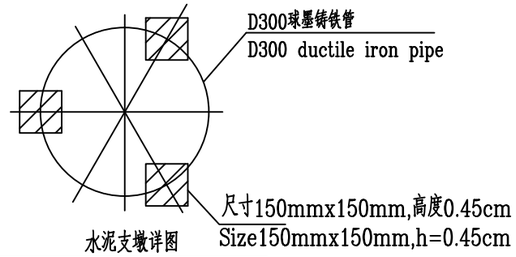

Detail drawing of cement support

Notes:

1. The station coordinate(AB) is adopted in this volume,unit of coordinate is m;
   EGM2008 elevation is adopted in this volume,unit of elevation is m;
   Pipe elevation is represented with the inner bottom elevation;
   diameters is expressed as symbol D.
2. H represents bottom elevation of Water sealed well,refer to drawing B60011S-S0502-002,summary table of Water sealed well and inspection well for emergency oil drainage system of Transformer.
3. Water height shall be guaranteed to form water seal,water level shall be checked periodically to meet requirement during operation.
4. After consulting with structural specialty,the reinforcement of Water sealed well refers to the GBGB04S519-40、41.

说明:

1. 本图采用站区座标系统，标高采用EGM2008高程系统，单位均以m计。所注标高为管内底标高，图中球墨铸铁管以D表示。
2、H表示水封井井底标高，详见本工程：B60011S-S0502-003图，水封井、检查井汇总表。
3、水封井内水位需保证水封高度，运行期间需定期检查水位是否满足要求。
4、经与结构专业协商，水封井结构配筋图参见图集GB04S519-40、41。

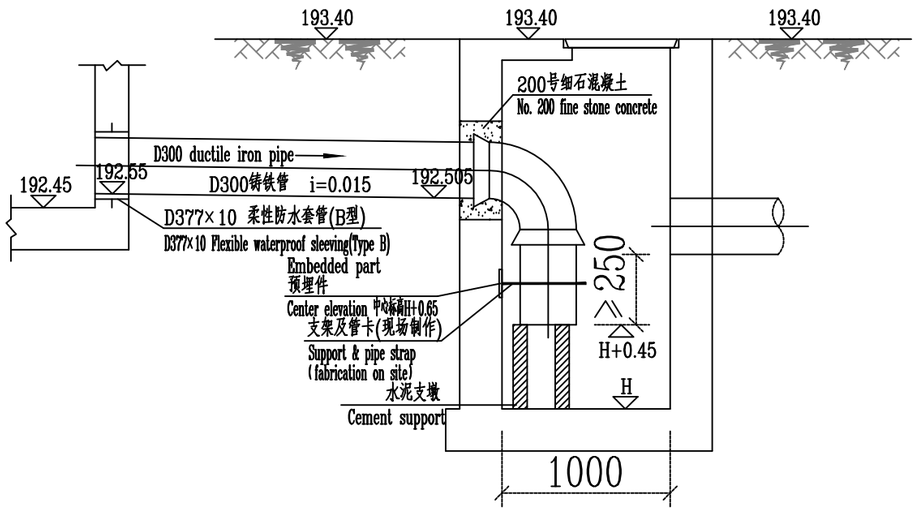

水封井B-B剖面图

B-B Section

Reference Drawings

Drwg. No.	Title

Revisions

	Name	Date	Notes

巴基斯坦默蒂亚里—拉合尔±660kV直流输电工程

±660kV HVDC Project from Matiari to Lahore in Pakistan

NATIONAL TRANSMISSION & DESPATCH COMPANY (NTDC) LIMITED PAKISTAN

CONTRACTOR 国家电网 STATE GRID 中国电力技术装备有限公司 CHINA ELECTRIC POWER EQUIPMENT AND TECHNOLOGY CO.,LTD.

拉合尔±660kV换流站

±660kV Lahore Converter Station

设计阶段 PHASE: 施工图 Detail Design

M L H V D C - L C S - C E T - D D - W F - 0 5 0 2 - 0 0 5 B

	姓名 Name	日期 Date
设计 Designed		2018.12.29
校核 Checked		2018.12.29
审核 Reviewed		2018.12.29
批准 Approved		2018.12.29

500kv/35kV变压器事故排油水封井布置详图(二)

Detail Layout Srawing Of Water Sealed Well For Emergency Oil Drainage System Of 500kV/35kV Transformer(二)

比例 Scale | 图号 DWG NO. 49-B60011S-S0502-005 | 版本 REV. B

297X420

Notes: Note: Pipe fittings (that are unexpectable or with a diameter ≤ DN50) and anti-corrosion materials are included in the length, do not list separately.
注：不可预计管件、小于等于DN50的管件以及防腐材料均计入管长，不另开列。

编号 No.	名 称 Name	规 格 Parameters	单位 Unit	数量	材料 Material	单 重 Single (重量Weight)	总 重 Total (重量Weight)	参考图号及备注 Remark
13	Heavy Cast Iron supportor 重型铸铁盖座	ø700	Set 座	6				Water supply and drainage standard collective drawings 给水排水标准图集 97S501-1/43
12	Heavy Cast Iron Manhole Cover 重型铸铁井盖	ø700	Set 座	6				Water supply and drainage standard collective drawings 给水排水标准图集 97S501-1/41
11	Support & Clip 管支架及管卡	Fabrication on site 现场制作	Set 套	4	Q235a			
10	B type water-proof sleeve 防水套管	D200×10 flexible Type B D200×10 柔性B型	Set 座	5	Q235a Plastic lining Q235a衬塑	–	–	Water supply and drainage standard collective drawings 给水排水标准图集 02S404 7
9	B type water-proof sleeve 防水套管	D300×10 flexible Type B D300×10 柔性B型	Set 座	4	Q235a Plastic lining Q235a衬塑	–	–	Water supply and drainage standard collective drawings 给水排水标准图集 02S404 7
8	B type water-proof sleeve 防水套管	D377×10 flexible Type B D377×10 柔性B型	Set 座	6	Q235a Plastic lining Q235a衬塑	–	–	Water supply and drainage standard collective drawings 给水排水标准图集 02S404 7
7	90° Elbow 90°球墨铸铁弯头	D100(double-socket) D100(双承)	Set 只	2	Ductile iron 球墨铸铁	–	–	国家标准 National Standard GB/T13295-2003 02S404 7
6	90° Elbow 90°球墨铸铁弯头	D100(double-socket) D300(双承)	Set 只	4	Ductile iron 球墨铸铁	–	–	国家标准 National Standard GB/T13295-2003
5	Sewer inspection well 检查井	ø1000	Set 座	5	Bricks 砖砌	–	–	Water supply and drainage standard collective drawings 给水排水标准图集 02S515 14
4	Water sealed well 水封井	1000×1000	Set 座	4	RC 钢筋混凝土	–	–	Refer to drawings of power transformation major 详见变电结构图纸
3	Ductile iron pipe 球墨铸铁管(排水)	D100(flexible connection, connection fittings are included in pipe length) D100(柔性连接，连接配件均计入管长)	m 米	35	Ductile iron 球墨铸铁	–	–	国家标准 National Standard GB/T13295-2003
2	Ductile iron pipe 球墨铸铁管(排水)	D100(flexible connection, connection fittings are included in pipe length) D200(柔性连接，连接配件均计入管长)	m 米	40	Ductile iron 球墨铸铁	–	–	国家标准 National Standard GB/T13295-2003
1	Ductile iron pipe 球墨铸铁管(排水)	D300(flexible connection, connection fittings are included in pipe length) D300(柔性连接，连接配件均计入管长)	m 米	190	Ductile iron 球墨铸铁	–	–	国家标准 National Standard GB/T13295-2003

Reference Drawings

Drwg. No.	Title

Revisions

	Name	Date	Notes

巴基斯坦默蒂亚里—拉合尔±660kV直流输电工程
±660kV HVDC Project from Matiari to Lahore in Pakistan

NATIONAL TRANSMISSION & DESPATCH COMPANY (NTDC) LIMITED PAKISTAN

CONTRACTOR 国家电网 STATE GRID 中国电力技术装备有限公司 CHINA ELECTRIC POWER EQUIPMENT AND TECHNOLOGY CO.,LTD.

拉合尔±660kV换流站
±660kV Lahore Converter Station

设计阶段 PHASE: 施工图 Detail Design

M L H V D C - L C S - C E T - D D - W F - 0 5 0 2 - 0 0 6 B

	姓名 Name	日期 Date
设计 Designed		2018.12.29
校核 Checked		2018.12.29
审核 Reviewed		2018.12.29
批准 Approved		2018.12.29

500kv/35kV变压器事故排油材料表
500kv/35kV Transformer Emergency Oil Drainage System Material Summary

比例 Scale | 图号 DWG NO. 49-B60011S-S0502-006 | 版本 REV. B

297X420